New Holland TG Series
Hi-Clearance
300 Saddles

Parts List			
ITEM	QT	PART NUMBE	DESCRIPTION
1	1	40-1200	NH Undertruss
2	2	20-1022	7x7x6' tube, black
3	2	20-1801	Black 300 Conversion
4	2	20-1011	300 Saddle, black
5	1	40-1400R	NH HC Side Plate R
6	1	40-1400L	NH HC Side Plate L

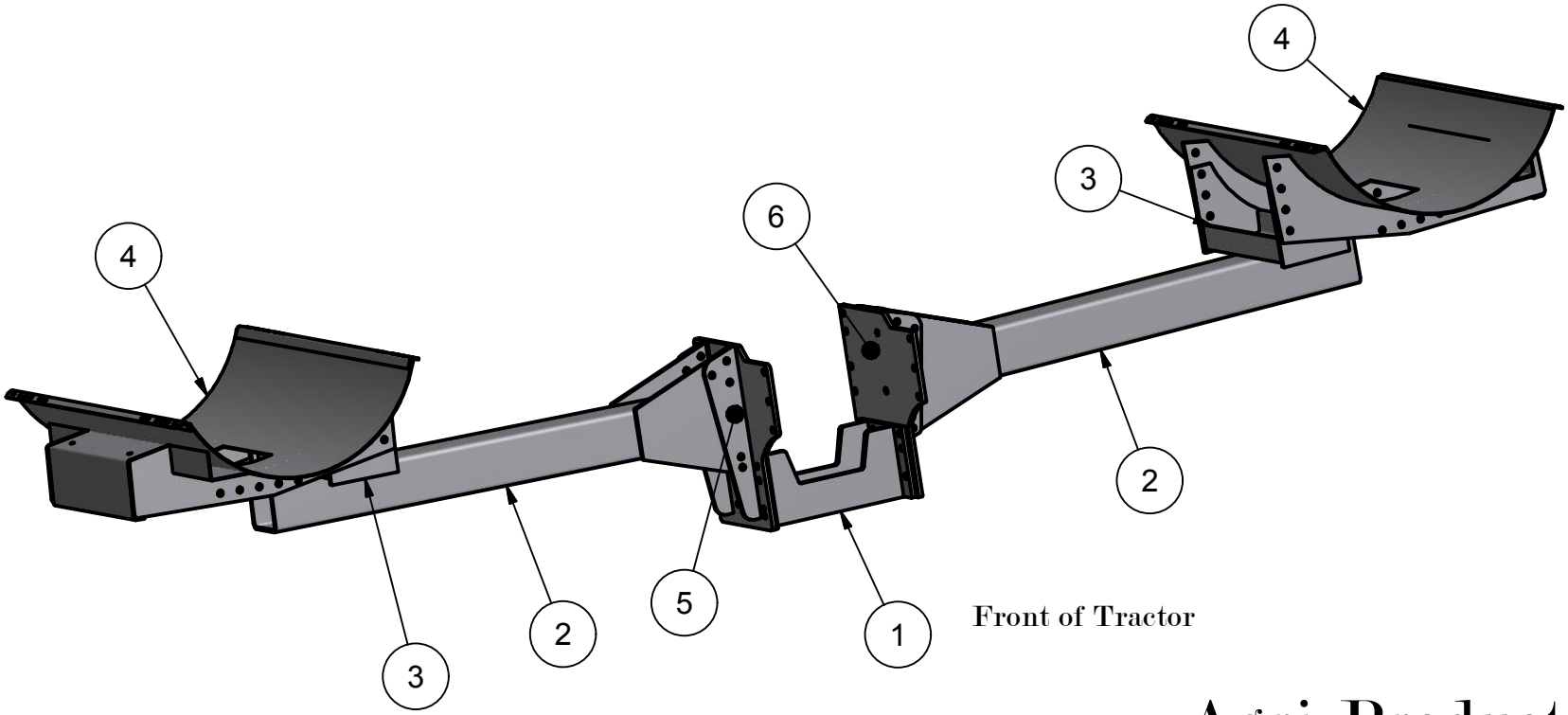

Agri-Products Inc.
York , Ne
1-800-288-1117