John Deere 7130 Series Small Frame Front Mount 300 Gal. Saddles

PARTS LIST			
ITEM	QTY	PART NUMBER	DESCRIPTION
1	1	10-1303	Front Mount Bracket 7130
2	1	10-1713L	Front Mount side brace LH
3	4		Front mount Brace plate spacer
4	1	10-1713R	Front Mount side brace RH
5	1	10-1011	300 Saddle, Green

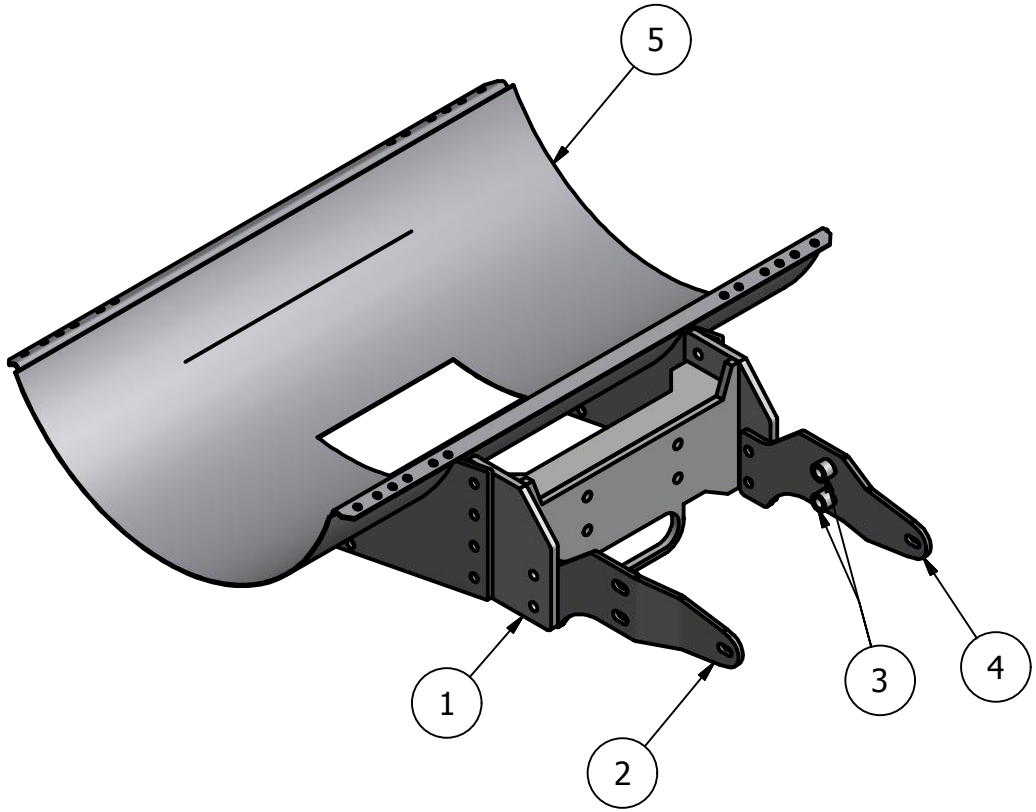

Agri-Products Inc.
York, Ne 68467
1-800-288-1117