Front Side Mount
New Holland
Row Crop
T9.505,T9.450,T9.390

300 ID: CS-STXWRC-1113-FSM-300R
400 ID: CS-STXWRC-1113-FSM-400R

PARTS LIST

ITEM	QTY	PART NUMBER	DESCRIPTION
1	1	20-1502	Case STX/Steiger Axle Plate Lg & XL Frame
2	1	20-1025	7 x 7 x 16' Tube
3	4	60-1033	4 x 6 Angle
4	1	20-1709R	Axle Brace Tube RH 2011
5	1	20-1709L	Axle Brace Tube LH 2011
6	1	20-1602 R	Row Crop Tractor Bracket 2013 R
7	1	20-1602 L	Row Crop Tractor Bracket 2013 L
8	2	20-1011	300 Saddle
9	2	20-1013	400 Saddle

Bolt List

QTY	Description	Placement
6	20 mmx 70 mm x 10.9 Bolts	Side Plate to Tractor
6	20 mm Nuts	
4	20 mm x 75 mm x 10.9 Bolts	Axle Plate to Front Axle
10	20 mm Hardened Flat Washers	
8	3/4 x 2 1/2 Bolts	Axle Plate to Side Braces
16	3/4 x 2 1/2 Bolts	Angle to Bottom of Saddle
4	3/4 x 7 x 9 U-bolts	Axle side Braces to 7 x 7 Tube
32	3/4 in Lock Washers	
32	3/4 in Nuts	
4	1 x 7 x 9 U-bolts	Saddle Angle to Tube
4	1 x 7 x 9 U Bolt	7 x 7 Tube to Tractor Side Plates
16	1" Lockwashers	
16	1" Nuts	
4	Nylon Straps	Tank to Saddle

Price List
300 gal w/Tanks $5210.00
400 gal w/Tanks $5770.00

Limitations may apply. Please consult API Sales at 800-288-1117.

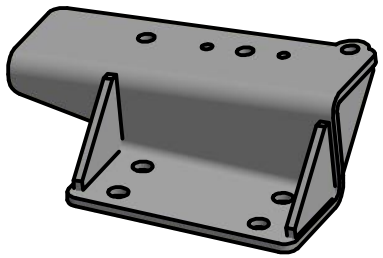
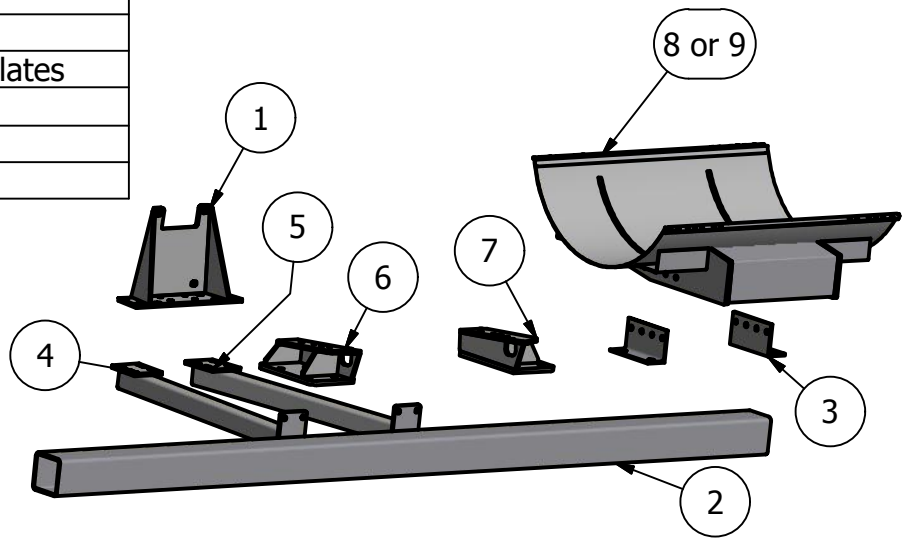
Front